evolutionpowertools.com

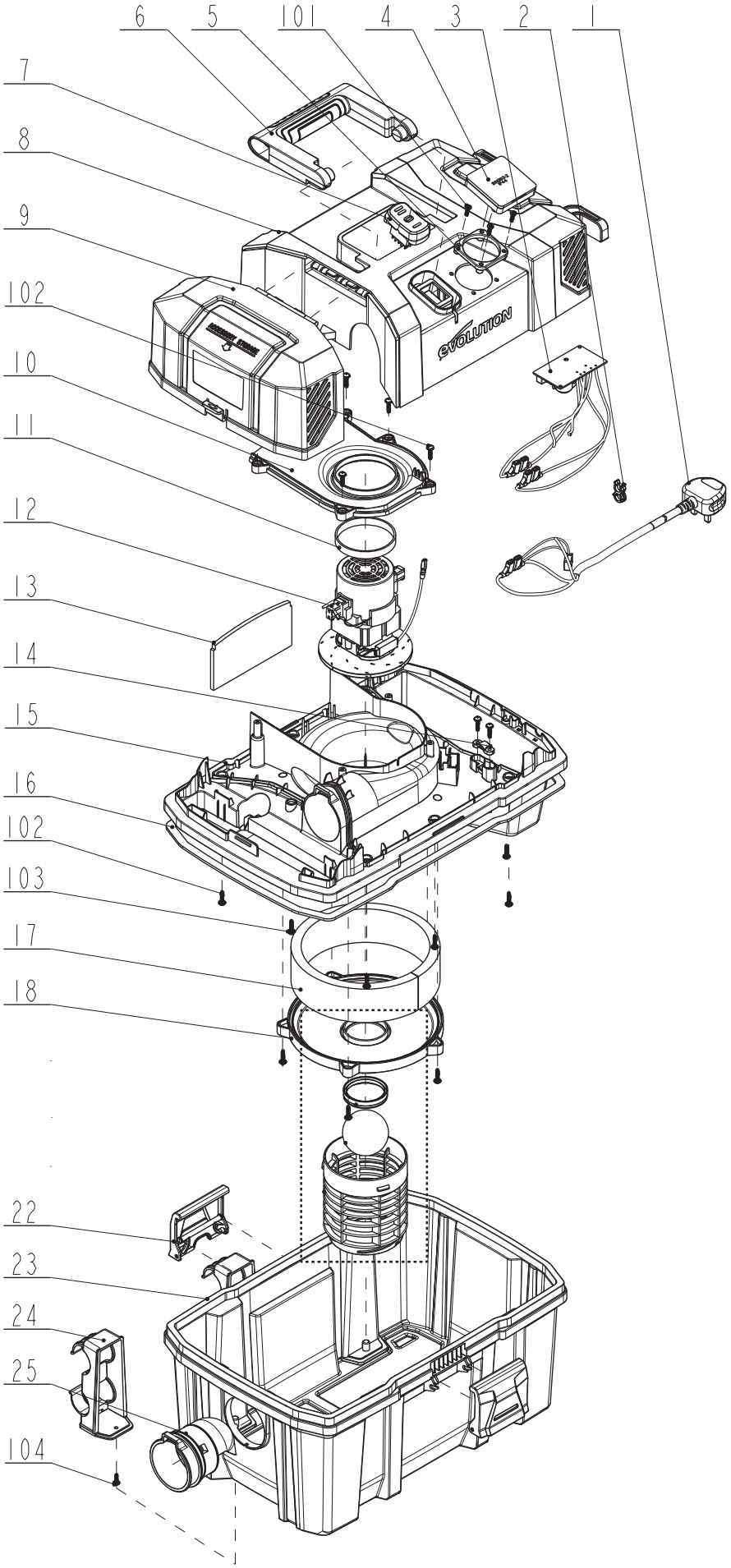

R15 VAC

Service Parts List	UK/EU 230V: 086-0001/086-0003

R15VAC - Wet and dry vacuum cleaner

No.	Description	Part Code	Qty
1	Power Cord (230V UK)	086-0201	1
2	Power cord buckle	086-0202	1
3	PCBA (230V)	086-0203	1
4	Synchronous socket (230V UK)	086-0204	1
5	Synchronous socket plate	086-0205	1
6	Handle	086-0206	1
7	ON/OFF Switch	086-0207	1
8	Top Cover	086-0208	1
9	Accessory Cover	086-0209	1
10	Thermal baffle	086-0210	1
11	Seal	086-0211	1
12	Motor	086-0212	1
13	Sponge	086-0213	1
14	Cable fixing board	086-0214	1
15	Lid	086-0215	1
16	Lid seal	086-0216	1
17	Noise cancellation sponge	086-0217	1
18	Filter Cage Assy	086-0218	1
22	Lid Latch	086-0222	2
23	Dust Tank	086-0223	1
24	Bracket	086-0224	1
25	Vacuum port	086-0225	1
101	Self tapping screw	086-0226	1
102		086-0227	1
103		086-0228	1
104		086-0229	1
	Accessory spare parts		
	Gulper Nozzle	086-0230	1
	Crevice Nozzle	086-0231	1
	Ø32mm Extension Wand	086-0233	1
	32mm X 1.8m Hose	086-0234	1

No.	Description	Part Code	Qty

Service Parts List | **UK/EU 230V: 086-0001/086-0003**

R15VAC - Wet and dry vacuum cleaner