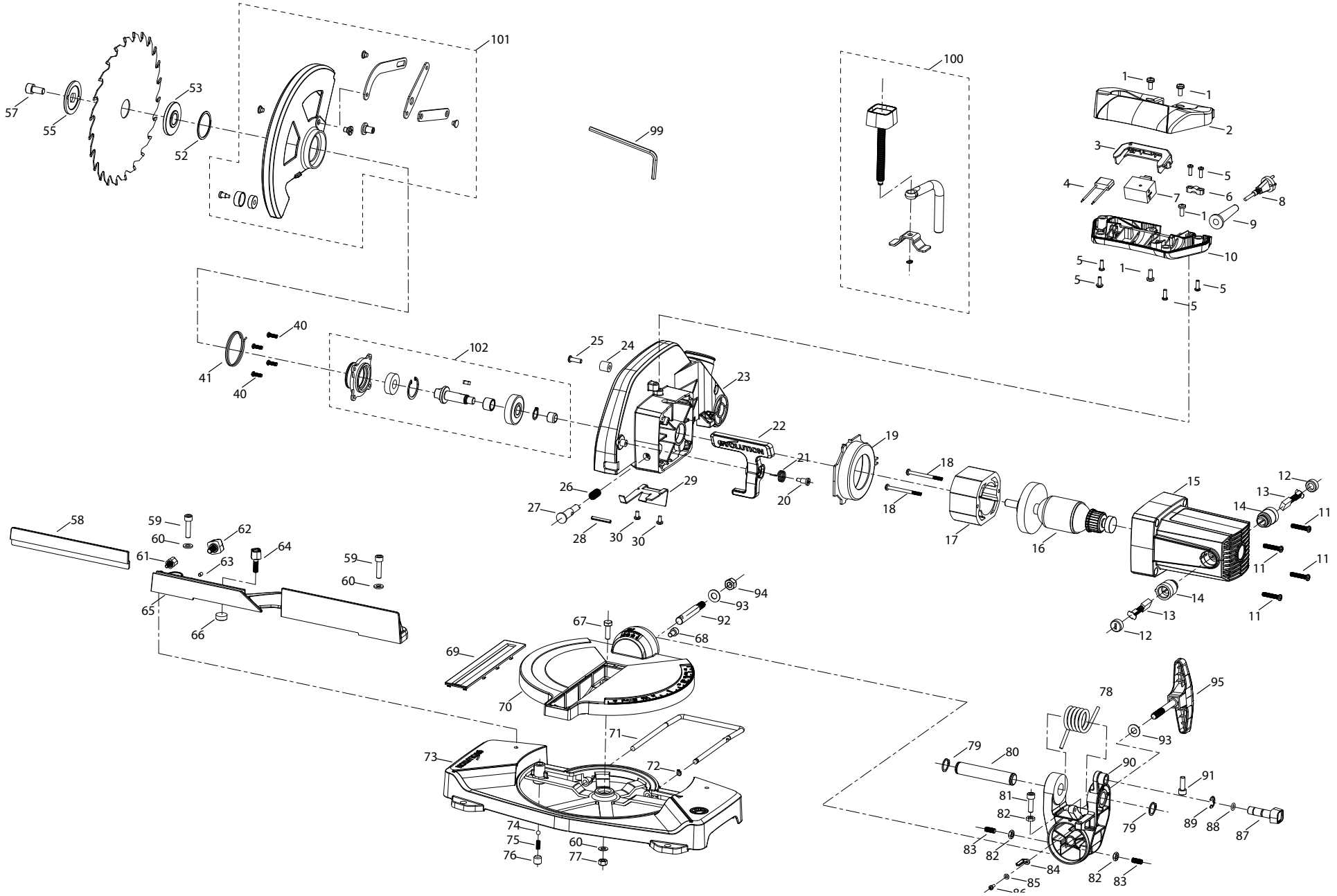

eVOLUTION® **F210CMS**
Multipurpose Compound Mitre Saw

Service Parts List 046-0008.01

DWG No	Description	Part Code	Qty
1	SCREW PAN HEAD M5X12	F-SPHPZ-M5-12-ST-BO	4
2	HANDLE-TOP	046-0102	1
3	TRIGGER (FCMS)	046-0205	1
4	CAPAPCITOR 0.22MF	046-0104	1
5	THREAD FORMING SCREW ST4X12	F-TFPX-8-12-ST-BO	6
6	CABLE CLAMP	046-0106	1
7	SWITCH	046-0107	1
8	POWER CORD 230V (EU)	046-0213	1
9	CABLE STRAIN RELIEF	046-0109	1
10	HANDLE-BOTTOM	046-0110	1
11	SCREW PAN HEAD M5X25	F-SPHPZ-M5-25-ST-BO	4
12	BRUSH HOLDER CAP	046-0112	2
13	CARBON BRUSH (Pr)	046-0113	2
14	BRUSH HOLDER	046-0114	2
15	MOTOR HOUSING	046-0115	1
16	ARMATURE 230V	046-0116	1
17	FIELD COIL 230V	046-0117	1
18	THREAD FORMING SCREW ST4X50	F-TFPX-8-50-ST-BZP	2
19	FAN SHROUD	046-0119	1
20	GUARD RELEASE LEVER - SHOULDER SCREW	046-0120	1
21	GUARD RELEASE LEVER - TORSION SPRING	046-0121	1
22	GUARD RELEASE LEVER (FCMS)	046-0222	1
23	HEAD/BLADE HOUSING	046-0123	1
24	BLADE GUARD BUMP STOP	046-0124	1
25	SCREW PAN HEAD M5X16	F-SPHPZ-M5-16-ST-BO	1
26	LOCK PIN - COMPRESSION SPRING	046-0126	1
27	LOCK PIN	046-0127	1
28	SPRING DOWEL 4X28	F-SDL-400-28-ST-BO	1
29	BLADE GUARD PRESSED PLATE	046-0129	1
30	SCREW PAN HEAD M4X8	F-SPHPZ-M4-8-ST-BO	2
40	SCREW PAN HEAD M4X12	046-0140	4
41	BLADE GUARD - TORSION SPRING	046-0141	1
52	EVENTS SHEILD COIL SPRING	046-0152	1
53	INNER FLANGE	046-0153	1
55	OUTER FLANGE	046-0155	1
57	M8X18 BLADE BOLT L/H THREAD	046-0157	1
58	SLIDING FENCE	046-0158	1
59	SOCKET HEAD SCREW M6X25	F-SHCS-M6-25-ST-BO	2
60	WASHER M6	F-W-M6-ST-BO	3
61	FENCE THUMB SCREW (FCMS)	046-0223	1
62	THUMB SCREW (FCMS)	046-0224	1
63	SOCKET SET SCREW M4X6	F-SSCFP-M4-06-ST-BO	1
64	TABLE LOCKING SCREW (FCMS)	046-0225	1
65	FENCE-MAIN	046-0165	1
66	MITRE LOCK PAD	046-0166	1
67	HEXAGON BOLT M6X20	F-HB-M6-20-ST-BO	1
68	SOCKET HEAD SCREW M6X12	F-SHCS-M6-12-ST-BO	1
69	CHANNEL GUIDE (FCMS)	046-0226	1
70	TABLE	046-0170	1
71	REAR SUPPORT BAR	046-0171	1
72	CIRCLIP EXTERNAL 6X0.7	F-CCEXT-6-070-ST-BO	2

DWG No	Part Code	Description	Qty
73	BASE	046-0173	1
74	8MM BALL BEARING	046-0174	1
75	COMPRESSION SPRING	046-0175	1
76	M10 X 10 SOCKET HEAD GRUB SCREW	046-0176	1
77	NYLOC NUT M6	F-NNIF-M6-ST-BO	1
78	PIVOT SPRING	046-0179	1
79	CIRCLIP EXTERNAL 16X1	F-CCEXT-16-100-ST-BO	2
80	PIVOT	046-0181	1
81	SOCKET HEAD SCREW M6X20	F-SHCS-M6-20-ST-BO	1
82	NUT STANDARD HALF M6	F-NSH-M6-ST-BO	3
83	SOCKET SET SCREW M6X14	F-SSCFP-M6-14-ST-BO	2
84	BEVEL INDICATOR (FCMS)	046-0227	1
85	WASHER M3	F-W-M3-ST-BO	1
86	SCREW PAN HEAD M3X8	F-SPHPZ-M3-8-ST-BO	1
87	HEAD LOCK DOWN PIN (FCMS)	046-0228	1
88	RUBBER O RING 10X1.9	046-0190	1
89	E CLIP EXTERNAL 8X0.8	F-ECLIP-8-080-ST-PO	1
90	PIVOT BLOCK	046-0192	1
91	SOCKET HEAD SCREW M6X18	F-SHCS-M6-18-ST-BO	1
92	BEVEL SHAFT	046-0194	1
93	WASHER M8	F-W-M8-ST-BO	2
94	NYLOC NUT FULL M8	F-NNIF-M8-ST-BO	1
95	BEVEL LOCK LEVER (FCMS)	046-0229	1
99	HEX KEY M6	F-HEXKEY-M6-ST-BO	1
100	HOLD DOWN CLAMP (FCMS)	046-0231	1
101	BLADE GUARD & LINKAGE	046-0203	1
102	GEARBOX ASSEMBLY	046-0204	1

DWG No	Part Code	Description	Qty

evolution®

F210CMS
Multipurpose Compound Mitre Saw

Service Parts List

046-0008.01